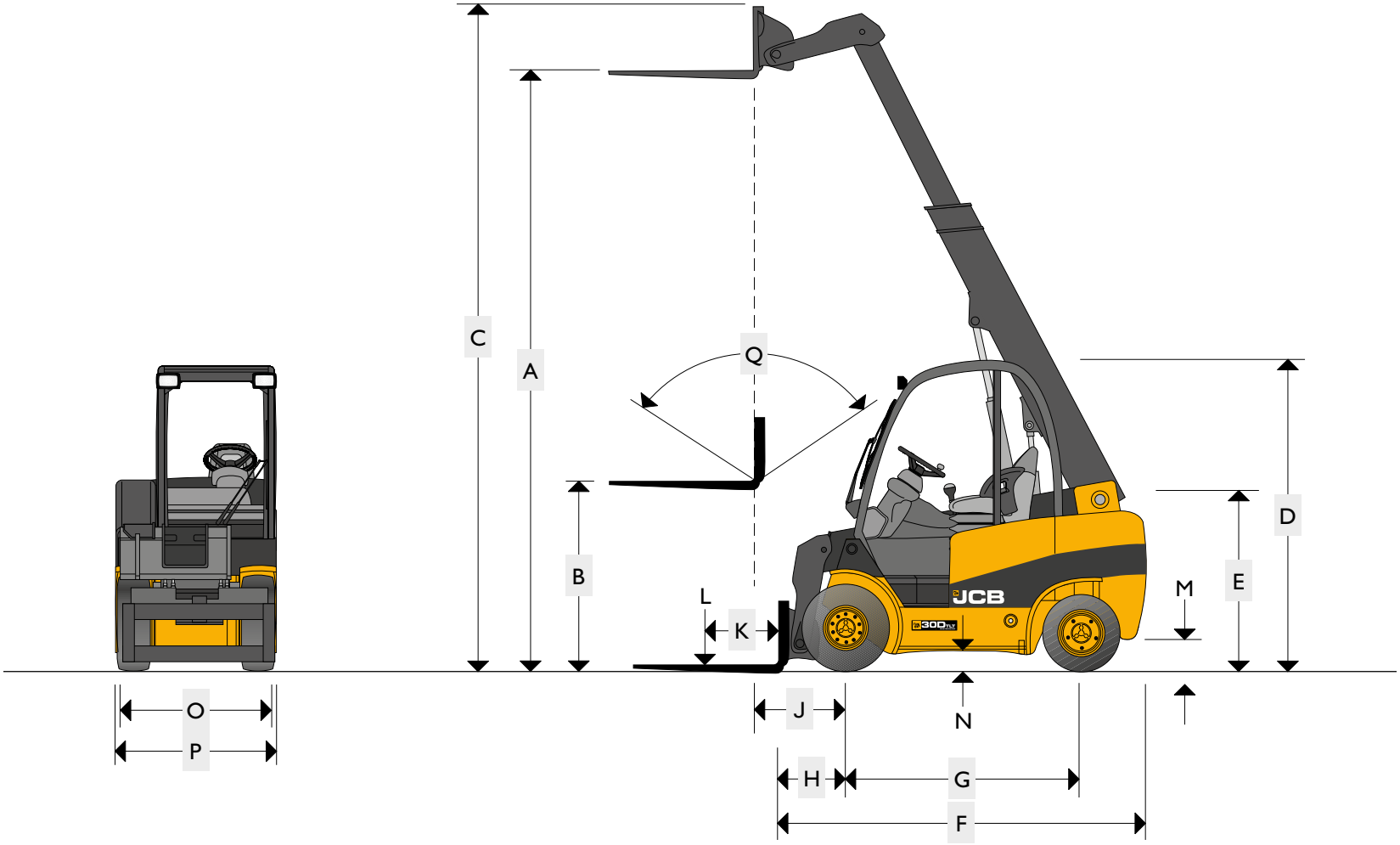

TELETRUK | TLT25/27/30/35

SPECIFICATION

STATIC DIMENTIONS

	MODEL	25D 2WD	25G 2WD	27D 2WD	27G 2WD	30D 2WD	30G 2WD	30D HL 2WD	30D 4WD	35D 2WD	35D 4WD
	Logistics	x	x	x	x	x	x	x		x	
	Construction					x			x	x	x
	Waste					x			x	x	x
	Agri			x	x	x		x	x	x	x
A	Lift height mm	4000	4000	4000	4000	4000	4000	5150	4000	4400	4350
B	Free lift (standard) mm	1424	1424	1424	1424	1410	1410	1410	1350	1410	1350
C	Height (boom extended) mm	4580	4580	4580	4580	4625	4625	5700	4805	4975	5150
D	Height of overhead guard (standard/low) mm	2190	2190	2190	2190	2205/2105*	2205	2205	2300/2200	2205/2105*	2300/2200
E	Height of operators seat mm	1066	1066	1066	1066	1071	1071	1180	1221	1180	1230
F	Length to fork face mm	2625	2625	2625	2625	2750	2750	3370	2840	3000	3200
G	Wheelbase mm	1700	1700	1700	1700	1700	1700	1950	1780	1950	2050
H	Distance from c/l of front axle to fork face mm	500	500	500	500	515	515	790	515	595	610
J	Distance from c/l of front axle to fork face (full height) mm	700	700	700	700	715	715	540	715	795	760
K	Load centre mm	500	500	500	500	500	500	500	500	500	500
L	Lift capacities (with sideshift) kg	2500	2500	2700	2700	3000	3000	3000	3000	3500	3500
M	Ground clearence (lowest point) mm	115	115	115	115	130	130	125	165	125	175
N	Ground clearence (wheelbase centre) mm	140	140	140	140	155	155	155	192	155	175
O	Fork carriage width mm	1100	1100	1100	1100	1200	1200	1200	1200	1200	1200
P	Maximum width of machine mm	1175	1175	1175	1175	1280	1280	1280	1400	1280	1400
Q	Carriage tilt total degrees	111	111	111	111	111	111	111	111	111	111

*Low option only available on construction and waste models

GENERAL SPECIFICATION

	Engine Manufacturer	PERKINS	Kubota	PERKINS	Kubota	PERKINS	Kubota	JCB DIESEL BY KOHLER	PERKINS	JCB DIESEL BY KOHLER	JCB DIESEL BY KOHLER
	Tier compliant	TIER 3 / STAGE III	EPA2/Stage V	TIER 3 / STAGE III	EPA2/Stage V	TIER 3 / STAGE III	EPA2/Stage V	TIER 4 / STAGE IIIB	TIER 3 / STAGE III	TIER 4 / STAGE IIIB	TIER 4 / STAGE IIIB
	Engine model	404 2.2	WG2503	404 2.2	WG2503	404 2.2	WG2503	KDI2504	D - 404	KDI2504	KDI2504
	Engine output (gross power)	37	43	37	43	37	43	46	37	46	46
	Cubic capacity	2200	2491	2200	2491	2200	2491	2504	2200	2504	2504
	Rated RPM	2600	2400	2600	2400	2600	2400	2600	2600	2600	2600
	Number of cylinders	4	4	4	4	4	4	4	4	4	4
	Working pressure atttachments	170	170	170	170	170	170	170	170	170	170
	Oil flow for attachments (standard / high)	28 / 70	28 / 70	28 / 70	28 / 70	28 / 70	28 / 70	28 / 70	28 / 70	28 / 70	28 / 70
	Maximum reach ground level (500mm load centre) mm	2230	2230	2230	2230	2230	2230	3300	2230	2280	2400
	Maximum reach boom horizontal (500mm load centre) mm	2390	2390	2390	2390	2390	2390	3320	2390	2430	2450
	Turning radius mm	2440	2440	2440	2440	2490	2490	2885	2995	2885	3500
	Aisle width 90 stacking 800x1200/1000x1200	3940/4140	3940/4140	3940/4140	3940/4140	4005/4205	4005/4205	4475/4675	4510/4710	4480/4680	5060/5260
	Weight unladen	4220	4440	4340	4575	4900	4930	5380	5100	5100	5500
	Travel speed (standard)	20	19	20	19	20	19	20	20	20	20
	Gradeability (unladen)	21	16	21	16	21	16	21	28	21	23
	Transmission	HYROSTATIC	HYROSTATIC	HYROSTATIC	HYROSTATIC	HYROSTATIC	HYROSTATIC	HYROSTATIC	HYROSTATIC	HYROSTATIC	HYROSTATIC
	Park break type	HAND	HAND	HAND	HAND	HAND	HAND	HAND	HAND	HAND	HAND
	Shoval rated capacity	n/a	n/a	n/a	n/a	0.6	0.6	n/a	0.6	0.6	0.6
	Shovel struck capacity	n/a	n/a	n/a	n/a	0.5	0.5	n/a	0.5	0.5	0.5
	shovel dump height (30)	n/a	n/a	n/a	n/a	2400	2400	n/a	2550	2680	2680
	shoval rollback angle at ground	n/a	n/a	n/a	n/a	37	37	n/a	33	37	33
	shovel width	n/a	n/a	n/a	n/a	1385	1385	n/a	1385	1385	1385
	Tyres PPS (Semi solid) P (Pneumatic)	PPS	PPS	PPS	PPS	PPS / P	PPS / P	PPS	PPS / P	PPS / P	PPS / P
	Tyre size front (standard)	7x12	7x12	7x12	7x12	27x10x12	27x10x12	27x10x12	27x10x12	27x10x12	27x10x12
	Tyre size rear (standard)	7x12	7x12	7x12	7x12	23 x 9 x10	23 x 9 x10	23 x 9 x10	27x10x12	23 x 9 x10	27x10x12
	Diesel tank capacity	44	n/a	44	n/a	44	n/a	55	44	55	55

LIFT CAPACITIES – TLT25/TLT27

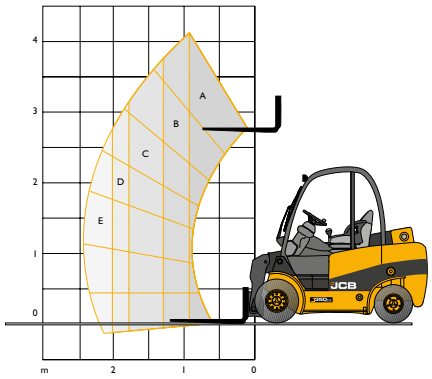

Capacity bands	TLT25	TLT27
A	2500 kg	2700 kg
B	2000 kg	2000 kg
C	1500 kg	1400 kg
D	1275 kg	1275 kg
E	1000 kg	1075 kg
@ 2 metres	1275 kg	1400 kg

LIFT CAPACITIES – TLT30

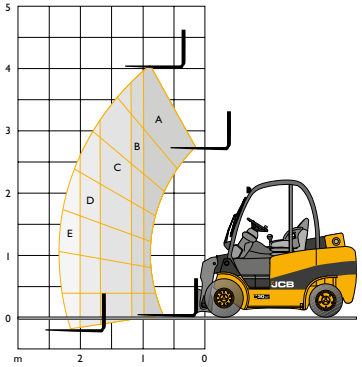

Capacity bands	TLT30
A	3000 kg
B	2500 kg
C	2000 kg
D	1750 kg
E	1500 kg
@ 2 metres	1750 kg

LIFT CAPACITIES – TLT30HL

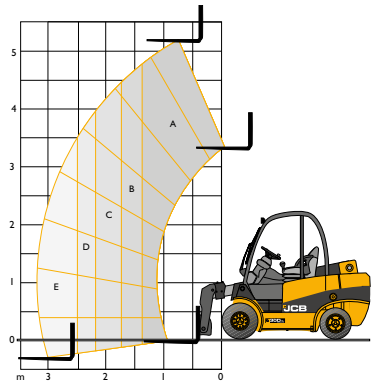

Capacity bands	TLT30HL
A	3000 kg
B	2500 kg
C	2000 kg
D	1750 kg
E	1250 kg
@ 2 metres	1950 kg

LIFT CAPACITIES – TLT35D

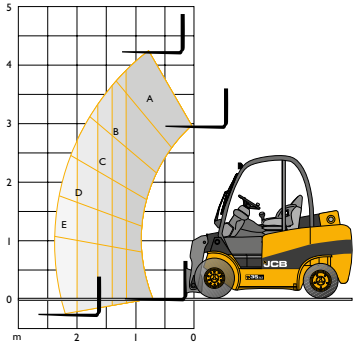

Capacity bands	TLT35
A	3500 kg
B	3000 kg
C	2500 kg
D	2100 kg
E	1700 kg
@ 2 metres	2100 kg

LIFT CAPACITIES – TLT30D 4X4

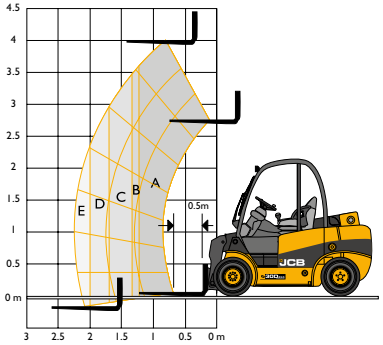

Capacity bands	TLT30D 4x4
A	3000 kg
B	2750 kg
C	2500 kg
D	2000 kg
E	1500 kg
@ 2 metres	2000 kg

LIFT CAPACITIES – TLT35D 4X4

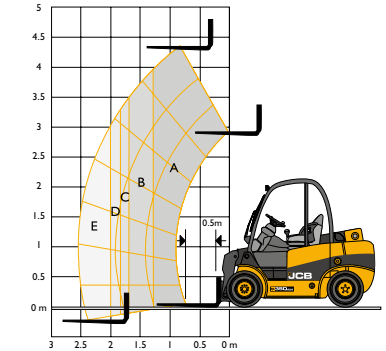

Capacity bands	TLT35D 4x4
A	3500 kg
B	3000 kg
C	2750 kg
D	2400 kg
E	2000 kg
@ 2 metres	2400 kg